DUNAVOX

THE WINE COOLING EXPERT

Wine Cooler

I

DUNAVOX NOBLE-32

DVN-32.85DB.TO

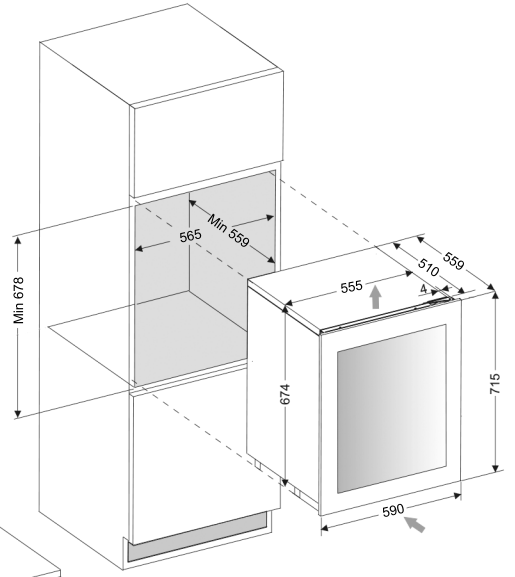

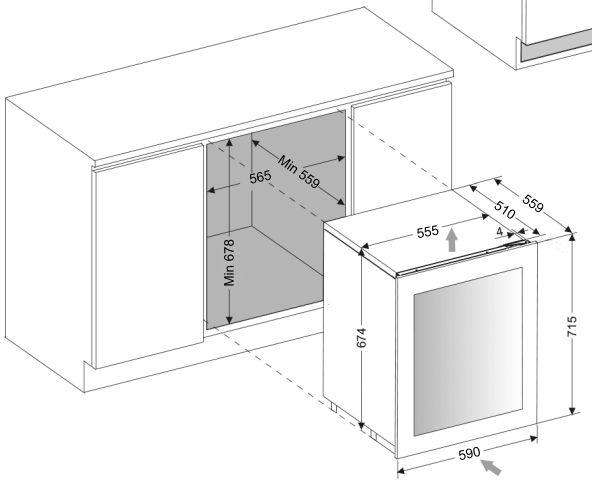

Front View

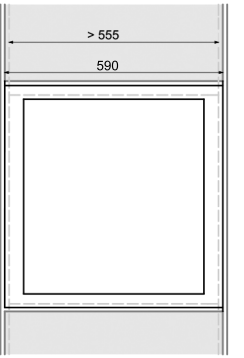

Side View

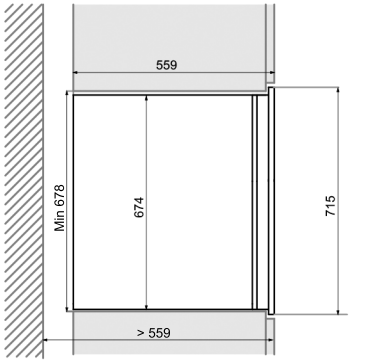

Top View

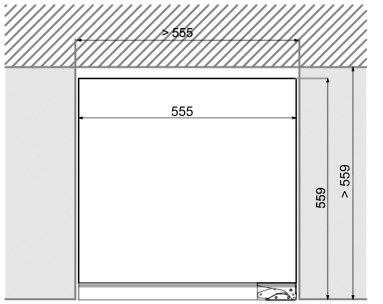

Remove

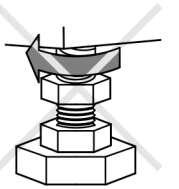

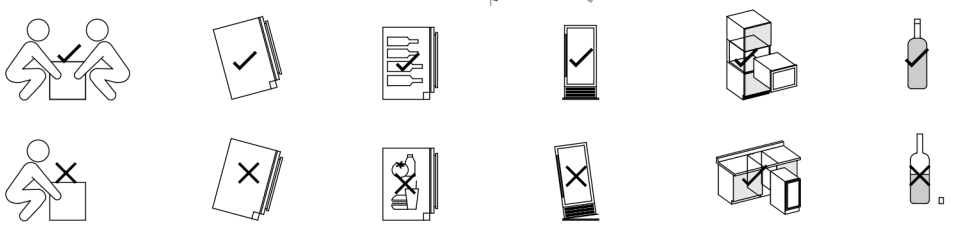

2025.V.1 Copyright Dunavox Kft. All rights reserved. www.dunavox.com