PANDORA

ELICA DESIGN CENTER

90 cm
Filtrante (motore interno) Filtering (internal motor)
Aspirante (motore esterno) Duct-out (external motor)
Acciaio inox + vetro nero, nero + vetro nero
Stainless steel + black glass, black + black glass

GME VERSION

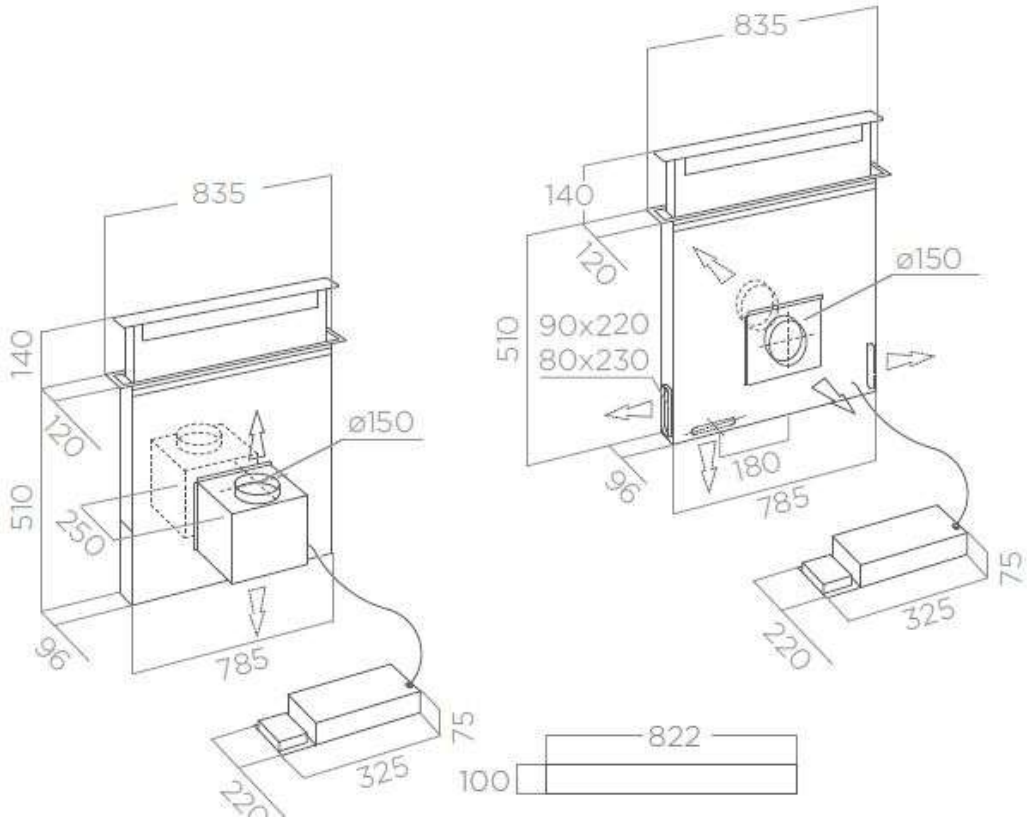

PERFORMANCE PERFORMANCE

Comandi Controls	**Pulsantiera elettronica 3V+I** 3S+B Electronic push button
Portata intensiva Booster airflow	669 m³/h
Livello sonoro min-max Noise level min-max	45 - 59 db(A)
Assorbimento totale Total absorption	275 W

Filtro grassi alluminio incluso Grease aluminium filter included
Filtro carbone incluso (*) Charcoal filter included (*)

ACCESSORI ACCESSORIES

Filtro carbone Charcoal filter	CFC0142324
Motore remoto esterno GME22A (muro) Remote external motor GME22A (wall)	PRF0179706
Motore remoto interno GME88 Remote external interno GME88	PRF0046491A

MODELLI MODELS

PANDORA IX/F/90 (*)	PRF0120980
PANDORA GME IX/A/90 (**)	PRF0120982
PANDORA BL/F/90 (*)	PRF0120979
PANDORA GME BL/A/90 (**)	PRF0120981

(*) Motore a bordo fornito
On-board motor supplied

(**) Motore remoto non fornito
Remote motor not supplied