Cantinetta sotto piano
Under counter wine cooler

PVMBP 60-44
PVMBP HD 60-52

A↑G F

Illuminazione interna blu o bianca a 3 intensità
Blue or white interior lighting with 3 intensity levels

44/52 300 mm

60 cm
Dimensions
Size

2
Temperatura
Temperature zones

COMPRESSORE INVERTER
INVERTER COMPRESSOR

PUSH

Caratteristiche / Product features

N° di bottiglie (tipo bordolese da 0,75 litri)	Number of bottles (bordeaux type 0,75 ltrs)	44-52
Dimensions PVMBP 60-44	Dimensions PVMBP 60-44	595x820x575 mm
Dimensions PVMBP HD 60-52	Dimensions PVMBP HD 60-52	595x880x575 mm
Temperatura	Temperature zones	2
Temperatura operativa	Temperature range	+5ºC a +20ºC
Capacità (litri)	Capacity (ltrs)	116 / 130
Consumo energetico	Energy consumption	104 / 105 KwH/year
Livello acustico	Noise Level	35 db
N° di vetri sulla porta	Number of glasses in the door	3
Guide telescopiche	Telescopic guides	Oui/Yes
Filtro a carbone attivo	Activated carbon filter	Oui/Yes

Misure (L x l x h) *Dimensions (W x H x D)*

Cerniera professionale "Soft-Close"
Professional German hinge "Soft-Close"

PVMBP 60-44 Disegno tecnico / Technical Drawings

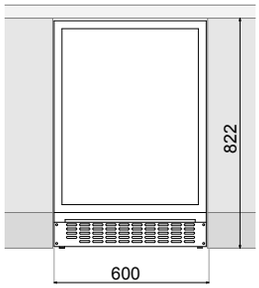

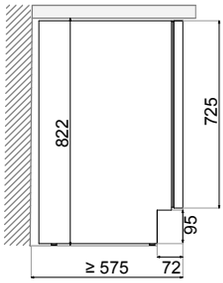

Altezza della porta
Door height

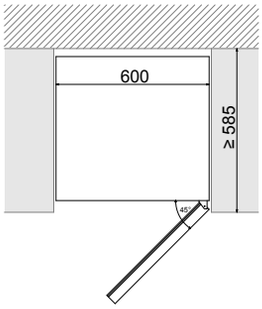

Link WEB

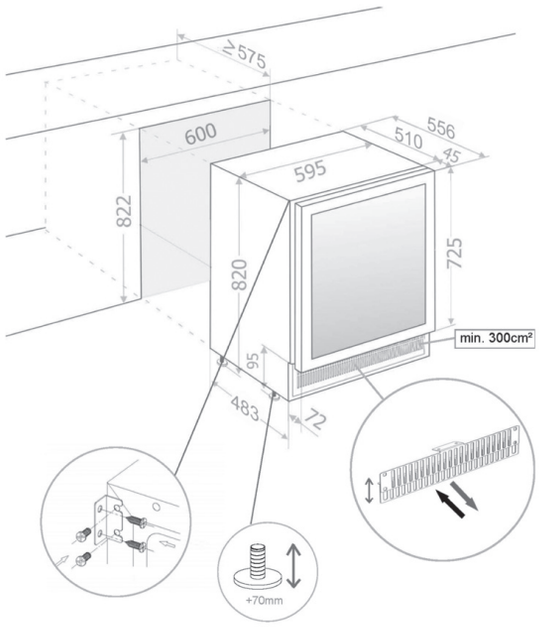

Piedini regolabili de 10 à 70
Adjustable legs from 10 to 70

PVMBP HD 60-52 Disegno tecnico / Technical Drawings

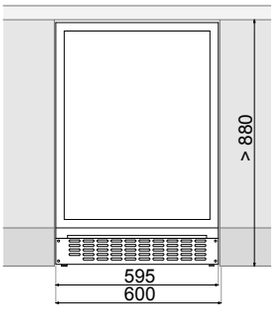

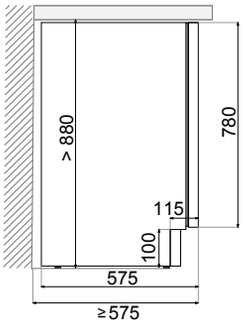

Altezza della porta
Door height

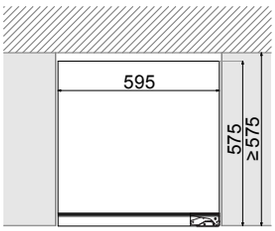

Link WEB

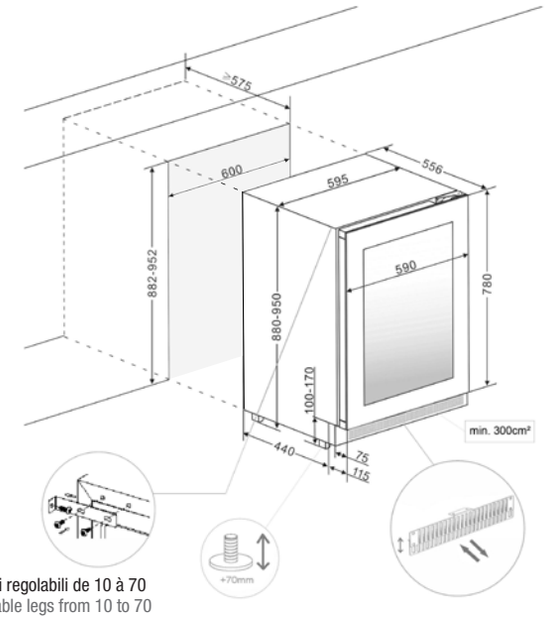

Piedini regolabili de 10 à 70
Adjustable legs from 10 to 70

PVMBP 60-44 ILLUMINAZIONE BLU / BLUE LIGHT

Code Code	Riferimento Product code	Finiture Finishing	Version Version	Apertura Opens to
010496	PVMBP 60-44CRR	Vetro nero Black glass	PUSH-TO-OPEN	Dte./Right
010534	PVMBP 60-44CRL			Gch./Left
010566	PVMBP 60-44XR	Inox S/Steel		Dte./Right
010580	PVMBP 60-44XL			Gch./Left

PVMBP 60-44 ILLUMINAZIONE BIANCA / WHITE LIGHT

010468	PVMBP 60-44CRR W	Vetro nero Black glass	PUSH-TO-OPEN	Dte./Right
010596	PVMBP 60-44CRL W			Gch./Left
010622	PVMBP 60-44XR W	Inox S/Steel		Dte./Right
010636	PVMBP 60-44XL W			Gch./Left

Opzionale / Optional

010189	Kit serrure / With door lock

PVMBP HD 60-52 ILLUMINAZIONE BLU / BLUE LIGHT

Code Code	Riferimento Product code	Finiture Finishing	Version Version	Apertura Opens to
010497	PVMBP HD 60-52CRR	Vetro nero Black glass	PUSH-TO-OPEN	Dte./Right
010535	PVMBP HD 60-52CRL			Gch./Left
010567	PVMBP HD 60-52XR	Inox S/Steel		Dte./Right
010581	PVMBP HD 60-52XL			Gch./Left

PVMBP HD 60-52 ILLUMINAZIONE BIANCA / WHITE LIGHT

010469	PVMBP HD 60-52CRR W	Vetro nero Black glass	PUSH-TO-OPEN	Dte./Right
010597	PVMBP HD 60-52CRL W			Gch./Left
010623	PVMBP HD 60-52XR W	Inox S/Steel		Dte./Right
010637	PVMBP HD 60-52XL W			Gch./Left